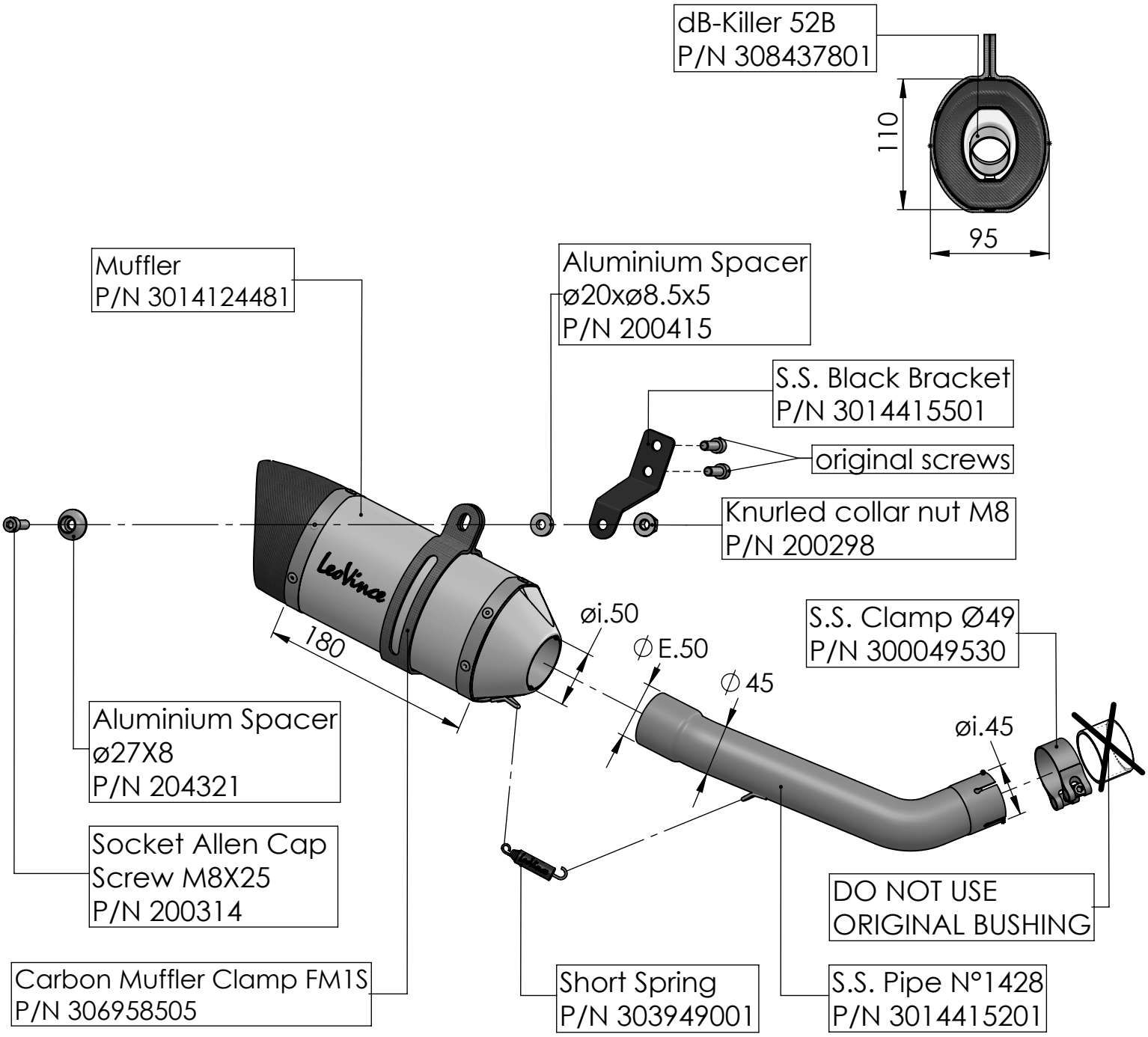

ART. 14417E

KTM RC 125 / RC 390

SLIP-ON - LV PRO - STAINLESS STEEL