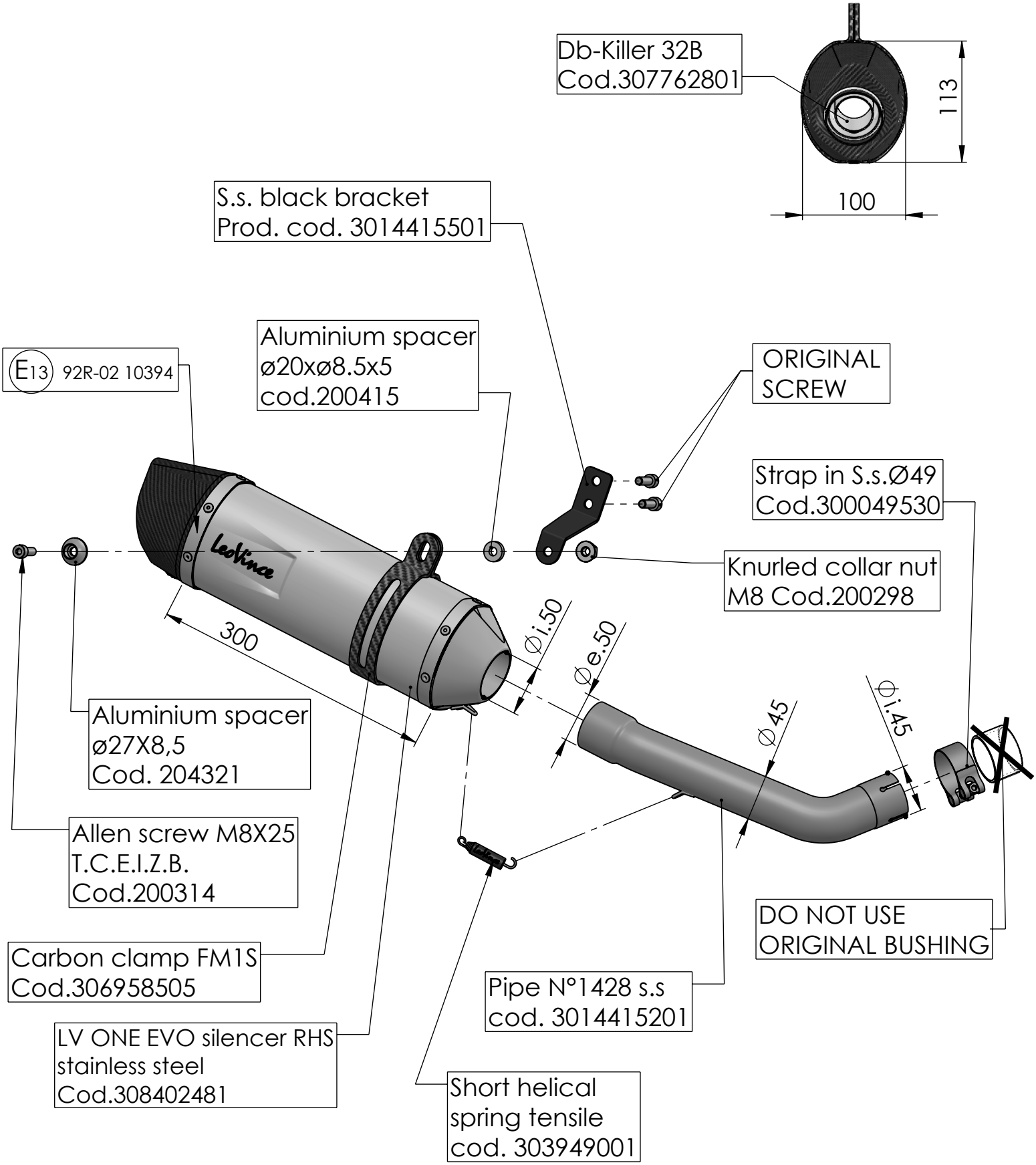

ART. 14415E

KTM RC 125 / RC 390

SLIP-ON - LV ONE EVO - STAINLESS STEEL - APPROVED